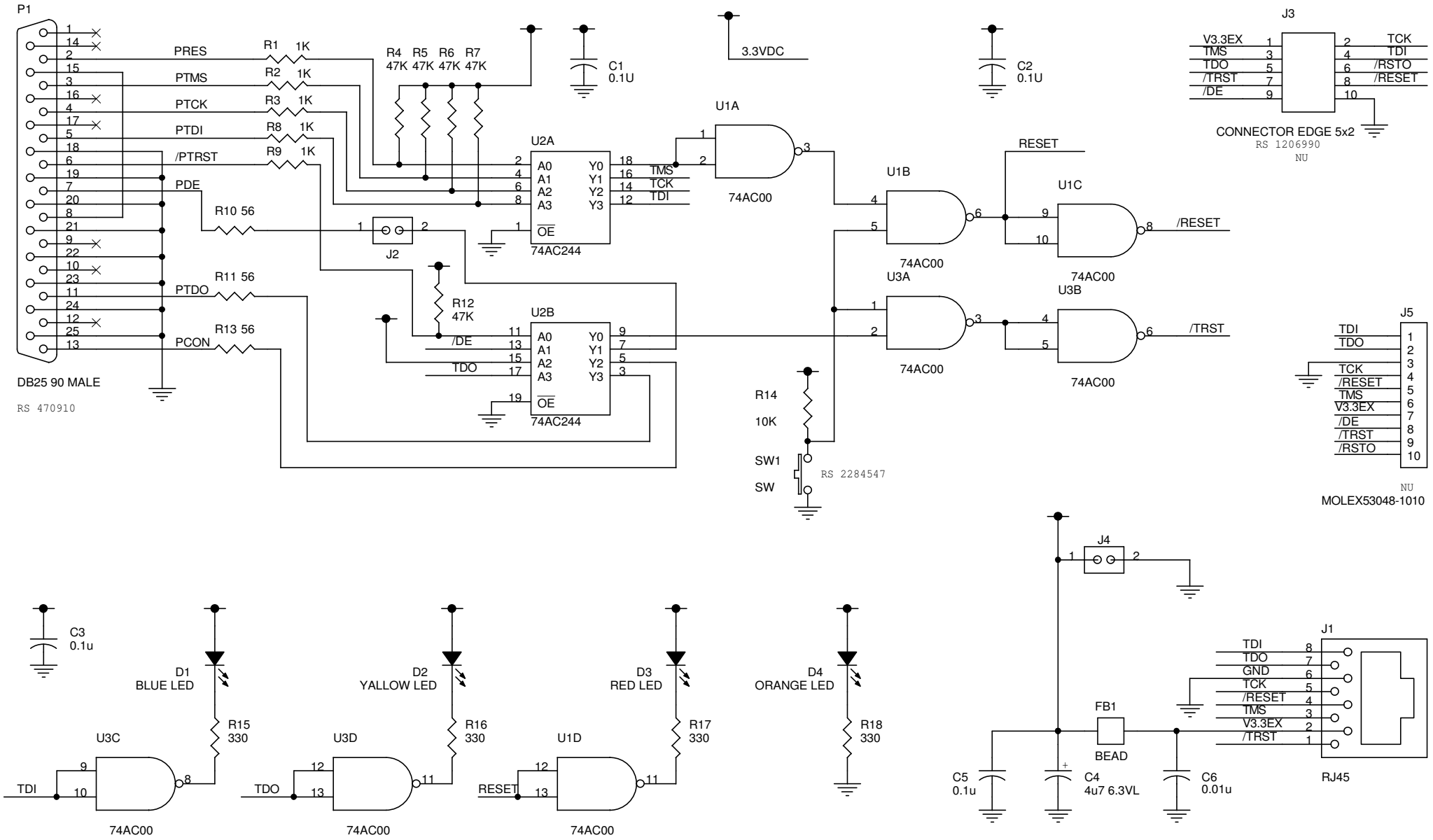

Title	JTAG ADAPTER ROBOTCUB	
Size A4	Document Number JTG-002	Rev 0.13
Date: Tuesday, July 25, 2006	Sheet 1 of 1	